Working standard
Model CTP1000, CTP2000 and CTP9000

WIKA Data Sheet CT 61.10

Applications

- Comparative calibration in dry block calibrators, tube furnaces and liquid baths

Special Features

- High stability
- Low drift, long service life
- Wide temperature range

Platinum resistance thermometers Model CTP2000

Description

Calibration by means of an external working standard thermometer

These WIKA working standard thermometers are particularly suited for applications in industrial laboratories. Here they enable easy comparative calibration in our baths, in our tube furnace and in our dry block calibrators.

The use of an external reference thermometer is recommended, particularly for the calibration of short temperature sensors. Therefore the errors due to the radial and axial temperature distribution in the temperature conditioning unit are considerably reduced.

For calibration, the test specimens and the working standard thermometer are brought to the same temperature in a temperature conditioning unit.

As soon as a stable temperature is reached, the test specimens are read or their output signals are measured (resistance, thermoelectric voltage, standard signal) and compared with the working standard thermometer.
Using this comparison method, the measuring uncertainty can be considerably reduced because not only the display of the temperature conditioning unit is taken into consideration.

Part of your business

Model Overview

Platinum resistance thermometers Models CTP1000 and CTP2000

Features
The measuring resistor consists of a platinum winding of highest purity, which is mounted free of stress in a housing of highest-purity aluminium oxide.
All parts are pre-aged in order to remove contamination and distortions.

Measuring technology
An optimum connection possibility for resistance thermometers is offered by the four-wire design. The measuring result is affected neither by the line resistance nor the temperature-dependant fluctuations.
The electrical connections are welded in order to minimise the contact resistance. The connecting wires are bound in a 2m long, shielded connection cable.

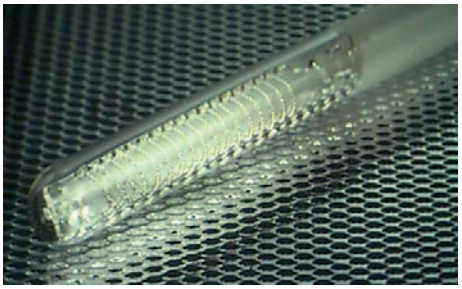

Principle of a platinum winding

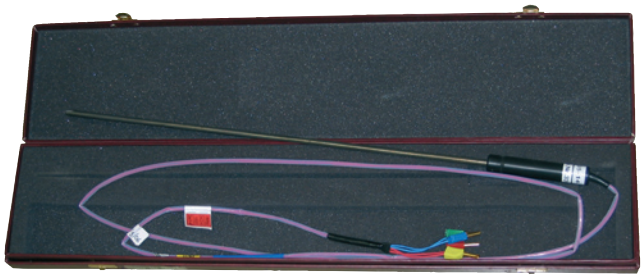

Platinum resistance thermometers Model CTP1000

Thermocouple Model CTP9000

Features
The working standard thermocouple is a Type S element whose nominal composition consists of Platinum and 10 % Rhodium (positive leg) against Platinum (negative leg) and belongs to the group of noble thermocouples.
It is characterised by its high stability. Essential for the stability at high temperatures is the quality of the thermowell used. For this reason, the high-purity aluminium oxide ceramic C 799 is used. The Type S thermocouple, besides the low ageing drift, also offers the advantage of a low basic tolerance.

Measuring technology
During the measurement it must be ensured that the compensating leads from the measuring point to the cold junction consist of substitute materials which have, in a limited temperature range, the same thermoelectric properties as the materials of the thermocouple. Therefore, at this transition, there is no thermoelectric voltage. This voltage is only generated at the point where the compensating leads are connected to normal copper leads.

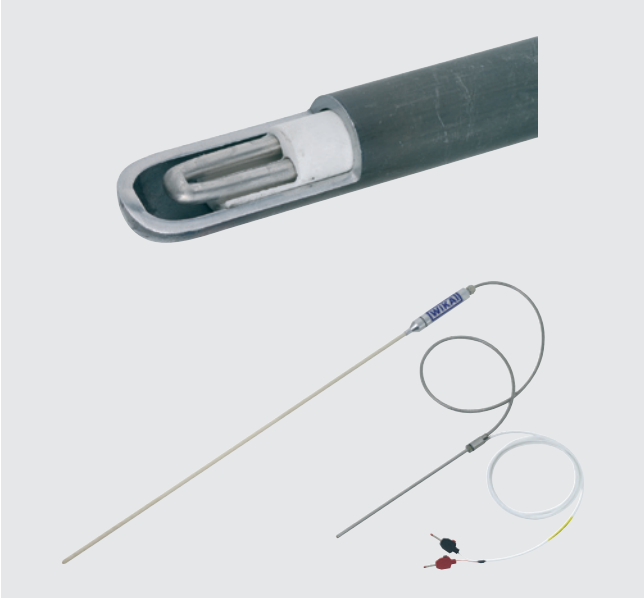

Thermocouple Model CTP9000

Calibration

Your working standard should be calibrated yearly. If it is subject to high mechanical stresses, it should be calibrated immediately to guarantee the measuring uncertainty.

Platinum resistance thermometer

Specifications		Model CTP1000	Model CTP2000
Temperature range	°C	-100 … +670	-200 … +450
Nominal resistance	Ohm	100	100
TK	1/K	α = 0.003850	α = 0.003850
Stability		< 40 mK after 100 h at 670 °C	< 50 mK after 100 h at 450 °C < 20 mK after 100 h at 300 °C
Sensitive length	mm	25	not specified
Dimensions, d x l	mm	6 x 480	4 x 500
Immersion tube material		Stainless steel	Stainless steel
Sensor connection		Four-wire connection	Four-wire connection
Cable		2 m PTFE cable Stripped and tin-coated	2 m cable Stripped and tin-coated
Connector		On request	4 mm pin plug

Thermocouple

Specifications		Model CTP9000
Temperature range	°C	0 ... 1,300
Type of thermocouple		Type S per IEC 584
Tolerance		Class 1
Thermocouple		Pt10Rh-Pt
Stability		< 0.5 after 250 h at 1,300 °C
Wire size, d x l	mm	0.5 x 1,500
Outer dimensions, d x l	mm	7 x 600
Material of the immersion tube		Ceramic C 799
Cable		400 mm with standard thermocouple connectors

Scope of delivery

- Thermometer
- Transport case
- DKD calibration for 6 temperatures
- Calculation of the characteristic constant and table R(t90) degree by degree.
- Cold junction in the metal tube, outer dimensions: d x l = 4.5 mm x 250 mm, supply cable: 2 m PVC cable, stripped cable ends
- Optional pin plug jack for CTP1000

Schematic representation of the connections

Resistance thermometers

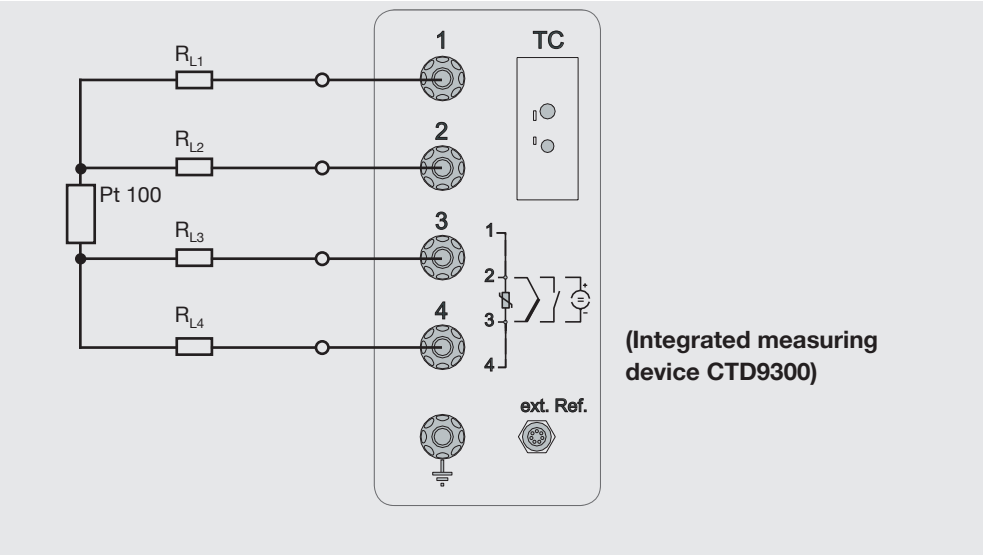

Schematic representation of the connections

Thermocouples

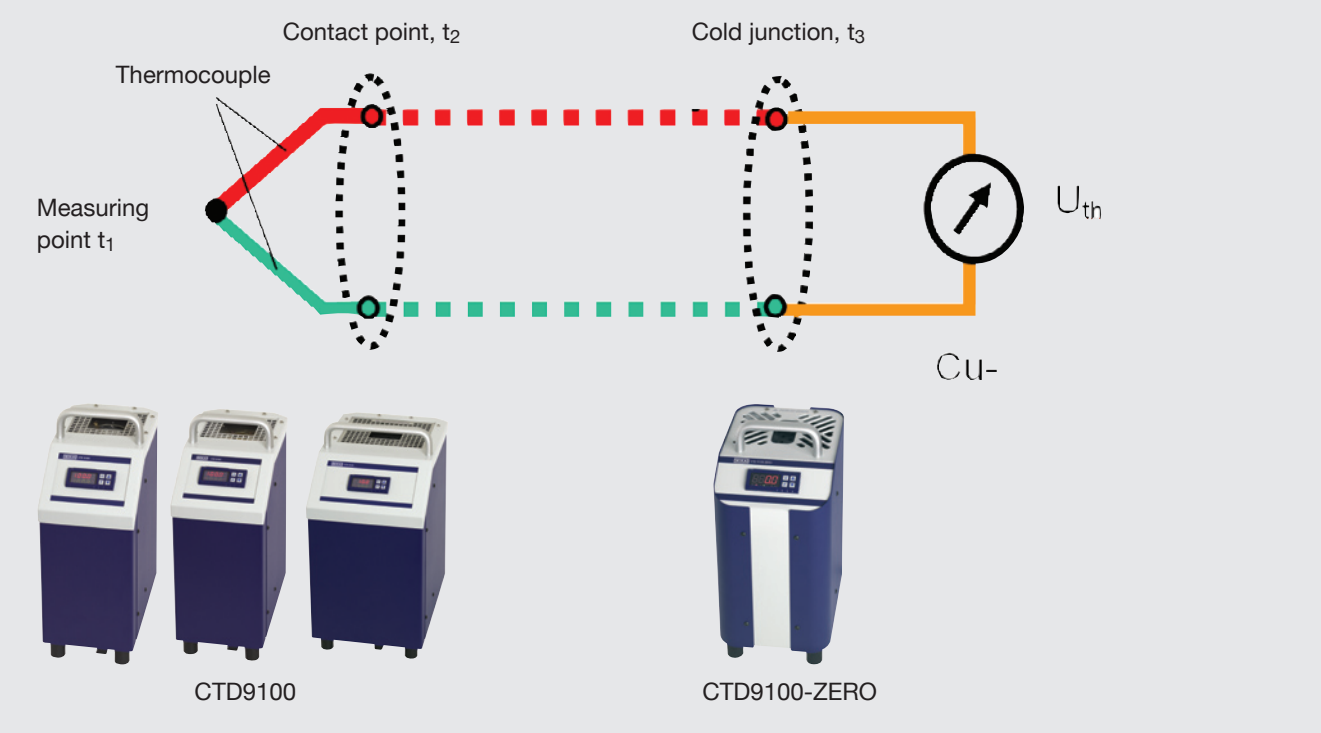

Specifications and dimensions given in this leaflet represent the state of engineering at the time of printing.
Modifications may take place and materials specified may be replaced by others without prior notice.

Mensor Corporation
201 Barnes Drive
San Marcos, Texas 78666
Tel: 512.396.4200
Fax: 512.396.1820
E-mail: sales@mensor.com
www.mensor.com

12928608 07/2009 GB